stouby
Design It Your Way

VICO UNO
VICO MAGISTRETTI TABLESERIES / ERIK SIMONSEN MDD

VICO UNO

En let stabelstol med stel udført i højstyrkestål, sæde i en forspændt kombination af bøg og birk. Stor og let stabelevne. Høj komfort sammen med en overlegen lethed i håndtering af stolen. En blød ryg, der giver god komfort i alle siddestillinger. De to "øjne" i sæde- og stelkonstruktionen er med til at signalere Vico Magistretti og det "pennestrøg" af humor som Vico var mester i.

A light stacking chair with frame made from high-tension steel, seat from molded combination of beech and birch. Large and easy stacking ability. High comfort with superior lightness in the handling of the chair. A soft back that gives good comfort in all seating positions. The two "eyes" in the seat and frame construction help signal Vico Magistretti and the dash of humor that Vico was good at.

VICO MAGISTRETTI 1920 - 2006 / ERIK SIMOMSEN MDD 1948

Stouby A/S er producent af en serie konference og kantinemøbler designet af Vico Magistretti og Erik Simonsen MDD. Samarbejdet mellem Vico Magistretti og Erik Simonsen startede i Fritz Hansen regi i 1997.

Arbejdet omkring Vico Uno og bordserien blev udført i Milano, Allerød og Acer Disigns studier og værksteder i Danmark.

Vico Magistretti og Erik Simonsen blev venner og nåede at finde mange kreative arbejdstimer sammen i Vicos domicil i Milano samt i Danmark.

Kort før sin død overdragede Vico Magistretti produktionsrettighederne til Erik Simonsen. En serie klassiske møbler med Italiensk charme og skandinavisk lethed.

Vico Magistretti har betydet meget for Erik Simonsens videre arbejde som udvikler og designer.

Vico Magistrettis mange originale livsopfattelser og arbejdsformer har præget Erik Simonsens undervisning på Integreret Design, Syddansk Universitet.

Vico Magistretti blev født i Milano i 1920 og døde i 2006. Han blev kendt for bygningsværker, møbler, lamper og industrielle designs.

Stouby A/S is a manufacturer of a line of conference and canteen furniture designed by Vico Magistretti and Erik Simonsen MDD. The collaboration between Vico Magistretti and Eric Simonsen started in connection with Fritz Hansen in 1997.

The work concerning Vico Uno and the table line was performed in Milan, Allerød and Acer Design's studios and workshops in Denmark.

Vico Magistretti and Erik Simonsen became friends and spent many creative working hours together in Vico's home in Milan and in Denmark.

Shortly before his death Vico Magistretti signed over the manufacturing rights to Erik Simonsen. A line of classic furniture with Italian charm and Scandinavian lightness.

Vico Magistretti has meant a lot to Erik Simonsen's continuous work as a developer and designer.

Vico Magistretti's many original perceptions of life and ways to work have influenced Erik Simonsen's teaching at "Integrated Disign", University of Southern Denmark.

Vico Magistretti was born in Milan in 1920 and died in 2006. He was known for buildings, furniture, lamps and industrial designs.

reddot design award
1999

Sizes:	**Sizes**:
Ø 80	80 x 180
80 x 80	80 x 200
70 x 140	80 x 240
80 x 160	90 x 240
	100 x 240

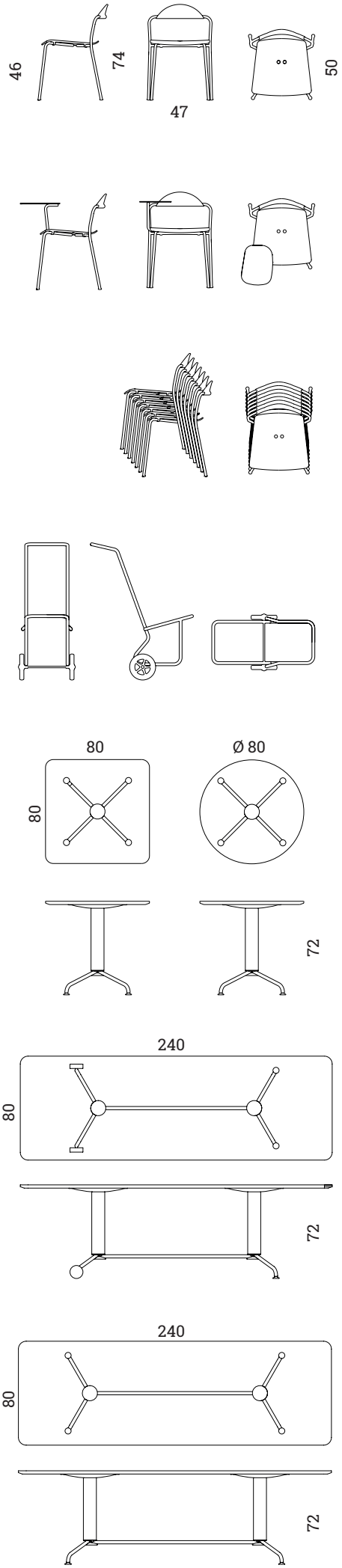

Vico Magistretti blev født i Milano i 1920 og døde i 2006. Vico Magistretti blev kendt for bygningsværker, møbler, lamper og industrielle designs. Vico Magistrettis værker har modtaget en lang række priser og er udstillet på designmuseer verden over.

Mange af Vico Magistrettis designs er skabt i begyndelsen af 60'erne. De fleste af disse designs er i 2016 stadig i produktion og ses i møbleringer og private hjem verden over.

Vico Magistretti arbejdede sammen med mange virksomheder: Artimide. Cassina. De Padova. Fiat Auto. Knoll International. Rosental. Fritz Hansen.

Vico Magistretti var i en lang periode gæsteprofessor ved Royal College of Art i London.

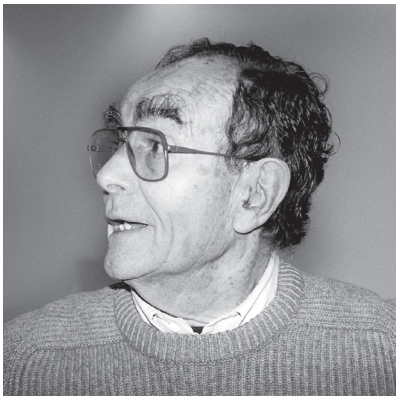

Vico Magistretti was born in Milano in 1920 and died in 2006. Vico Magistretti was known for buildings, furniture, lamps and industrial designs. Vico Magistretti's work has received a lot of awards and has exhibited at design museums all over the world.

Many of Vico Magistretti's designs were created in the beginning of the 60s. In 2016 most of the designs are still being manufactured and are seen in furnishings and private homes all over the world.

Vico Magistretti worked with many trend setting companies: Artemide. Cassina. De Padova. Fiat Auto. Knoll International. Rosental. Fritz Hansen.

Vico Magistretti was a guest professor at Royal College of Art in London for a long time.

reddot design award
1999

CHAIRS

stouby
Design It Your Way

Painted Colors

Azure | Oasis | Bark | Ruby | Black | White

Natural Veneers

Walnut | Oak

TABLES

Forbo Desktop Linoleum

4023 | 4132 | 4174 | 4175 | 4176 | 4183

High Pressure Laminate

K2300 PSM

Natural Veneers

Walnut | Oak

Stouby Furniture A/S - phone +45 7565 0100 - Fax +45 7565 0041 - www.stouby.com - stouby@stouby.com